60 cm Fully Integrated Dishwasher
Heritage Series

DW6083PRV

The Bertazzoni 60 cm fully integrated dishwasher is large enough for up to 14 place settings on three racks. Touch controls with LED display let you access 7 programmes from Eco to Self-cleaning, with 3 functions. A turbo drying system ensures quick drying at the end of the programme. It's insulated to keep noise levels at a low 42db. Automatic door opening at the end of the washing cycle speeds up the drying process.Like all new Bertazzoni dishwashers, it is new C energy rated.

Guarda online

Spécifications

Features

General features

Size	60 cm
Place setting	14
Sound level maximum speed (dbA)	42 dbA
User interface	electronic touch control with LED screen on the door
Spray arms	3
Number of racks	3
Wash cycles	8 (normal, eco, glass, 90min, auto, hygiene, party wash, self cleanning
Functions	4 (extra drying, extra hygiene, express, energy save)
Automatic door opening	yes
Energy class	C
Voltage and frequency	220-240V/50Hz
Absorbed power (W)	1760-2100 W
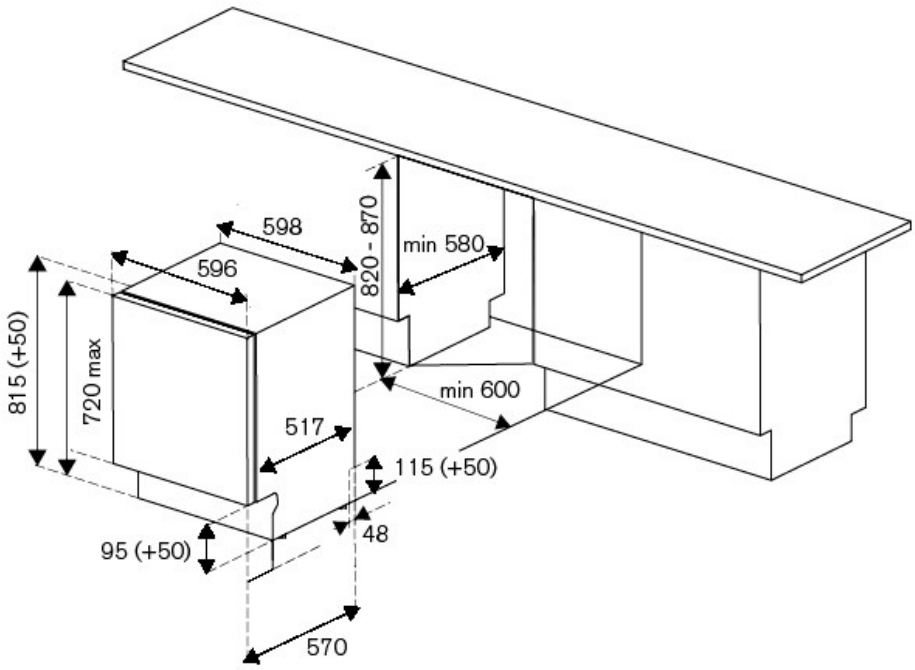
Dimensions