60 cm Fully Integrated Dishwasher, Sliding Door

Professional Series

DW6083PRTS

60 cm fully integrated dishwasher with sliding door system is the perfect fit for any kitchen. The revolutionary sliding door system lets the decorative panel slide up by 9cm for the perfect fit with up to a 2cm plinth. It is large enough for up to 15 place settings on three racks. Touch controls with LED display let you access 8 programmes from Eco to Self-cleaning, with 4 functions. It's insulated to keep noise levels at a low 42db. Like all Bertazzoni new dishwashers, it is new C energy rated.

Guarda online

Spécifications

Features

General features

Size	60 cm
Place setting	15
Sound level maximum speed (dbA)	42 dbA
User interface	electronic touch control with LED screen on the door
Spray arms	3
Number of racks	3
Wash cycles	8 (normal, eco, glass, 90min, auto, hygiene, party wash, self cleanning)
Functions	4 (extra drying, extra hygiene, express, energy save)
Lighting	LED
Automatic door opening	yes
Energy class	C
Voltage and frequency	220-240V/50Hz
Absorbed power (W)	
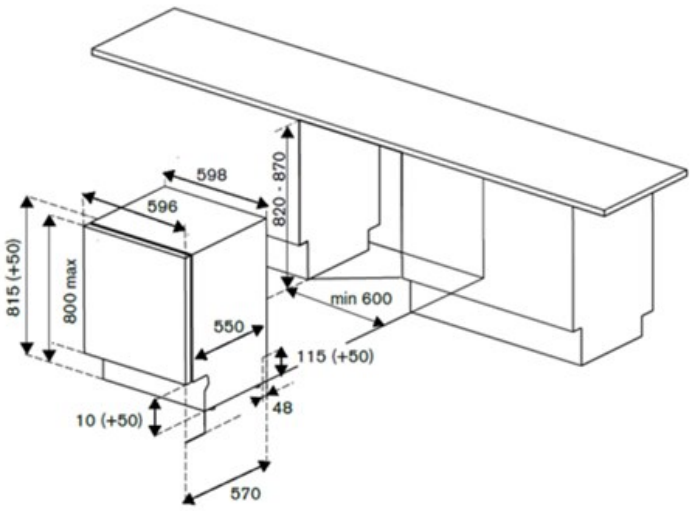
Dimensions