60cm Fully Integrated Dishwasher, Automatic Open Door

Professional Series

DW6083PRT

The Bertazzoni 60 cm fully integrated dishwasher is large enough for up to 15 place settings on three racks. Touch controls with LED display let you access 8 programmes from Eco to Self-cleaning, with 4 functions. It's insulated to keep noise levels at a low 38db. Automatic door opening at the end of the washing cycle speeds up the drying process. Like all Bertazzoni new dishwashers, it is new C energy rated.

Guarda online

Spécifications

Features

General features

Size	60 cm
Place setting	15
User interface	electronic touch control with LED screen on the door
Spray arms	3
Number of racks	3
Programs	8 (normal, eco, glass, 90min, auto, hygiene, party wash, self cleanning)
Functions	4 (extra drying, extra hygiene, express, energy save)
Lighting	LED
Automatic door opening	yes
Power rating	975 W
Energy class	C
Voltage and frequency	220-240V/50Hz
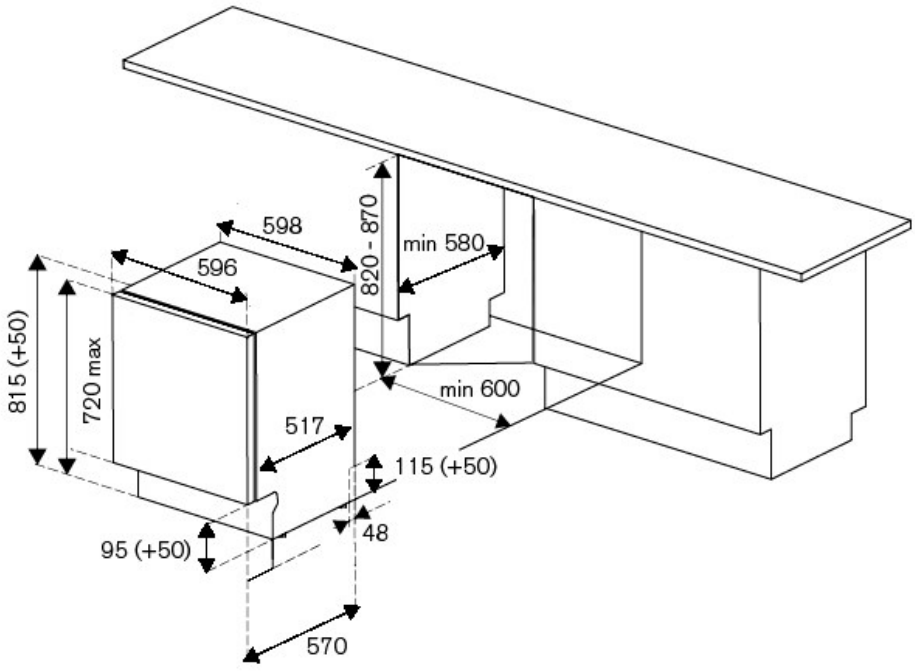
Dimensions