90 cm island mount hood
Professional Series

KTI90P1AXT

This Bertazzoni Professional Series 90cm stainless steel island hood has a single motor offering three speeds and effective stainless steel filters. Electronic controls with LED display make it simple to adjust and four bright LED lights make it easy to see what you are doing on the hob. The powerful motor extracts 750 m3h max and is rated A+ energy class.

Guarda online

Spécifications

Features

General features

Size	90 cm
Hood type	island mount
Hood control	electronic with buttons
Motor	1
Speed	3 + booster
Filters type	stainless steel
Lights	4 LED
Hood special features	24h function
Hood finishing	stainless steel
Timer	yes
Sound rating	65 dBA
Output air extraction (m^3/h)	750 m3h
Energy class	A+
Voltage and frequency	220/240 V - 50/60 Hz
Absorbed power (W)	274 W
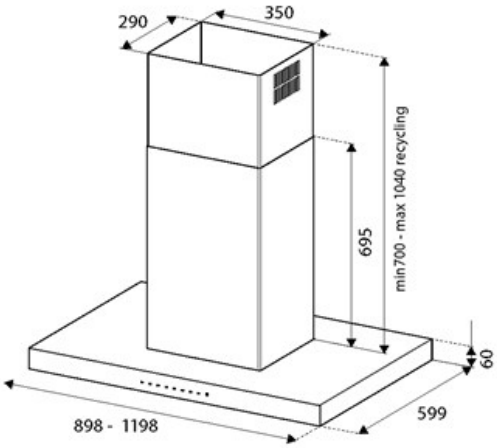
Dimensions